INSTALLATION DIRECTIONS

VON DUPRIN®

BEFORE APPLYING THIS DEVICE

A. Check that handing of hardware corresponds to handing of door.

1. PREPARE DOOR

A. Tape template No. 1 or 2, depending on handing of door to inside face of lock stile. Be sure centerline of device on template is parallel to edge of door and backset is 2-3/8. Be sure centerline of device is 39-13/16" to finished floor.

B. Prepare door as shown. See Fig. 1 for metal door application.

2. INSTALL TOP ROD AND LATCH RELEASE (FIG. 2)

A. Slip top rod and latch release into top door channel cutout. Reference 2-3/8 to centerline of vertical rods.

B. Be sure latch release is flat on top door channel.

C. Apply rod guide and tighten mounting screws. (Fig. 2C)

3. INSTALL BOTTOM ROD AND GUIDE (FIG. 3)

NOTE: DO NOT CUT BOTTOM ROD

A. Slip bottom rod through hole in bottom door channel.

B. Screw coupling on bottom rod onto top rod.

C. Install bottom rod guide with spring toward top of door.

4. ADJUST BOTTOM ROD

A. Depress plunger and push top rod toward bottom of door.

B. Bottom rod must extend 5/8" from bottom of door.

C. If necessary adjust coupling to raise or lower bottom rod.

D. Be sure rectangular hole in coupling is visible through rectangular cutout in door.

5. APPLY LOCK STILE CASE (FIG. 4)

A. Attach lock stile case to door. See Fig. 1.

B. Check top rod travel. Top rod should be flush to 1/16 above latch release surface.

C. Remove lock stile case and adjust coupling if necessary.

6. HANG DOOR AND INSTALL SILL STRIKE AND THRESHOLD (IF ANY) FIG. 5

7. INSTALL SOFFIT LATCH BOLT (FIG. 6)

A. Block door in open position.

B. Install latch bolt as shown.

8. APPLY PLUNGER RELEASE BRACKET (FIG. 7)

A. Close door against stop.

B. Tape template No. 3 to stop and prepare frame for attaching screws.

C. Position bracket to depress plunger, and allow rods to fall into engaged position.

D. Tighten bracket mounting screws.

9. APPLY HINGE STILE CASE AND CROSSBAR TUBE (FIG. 9)

A. Slip crossbar tube on lock stile and hinge stile lever arms. (See Direction No. 941009 for cutting crossbar, if necessary.)

B. Be sure crossbar is level and hinge stile case is parallel to edge of door and approximately on centerline of exposed stile.

C. Using holes in hinge stile case, mark location and prepare door for sex bolts. Drill 13/32 dia. outside and 3/8 dia. inside.

D. Apply hinge stile case with crossbar in place.

E. Tighten wedge-tite set screws securely with dog key and screwdriver or equivalent for leverage, and test crossbar for free action. (See Direction No. 941009 for these instructions.)

10. APPLY OUTSIDE TRIM (IF REQUIRED)

A. See directions in trim carton. Line "X-X" on trim template corresponds to line "X-X" on device template and is parallel to edge of door. Transfer line "X-X" from inside face to outside face of door.

B. Prepare outside face of lock stile and apply trim.

11. APPLY COORDINATOR

See directions in coordinator package.

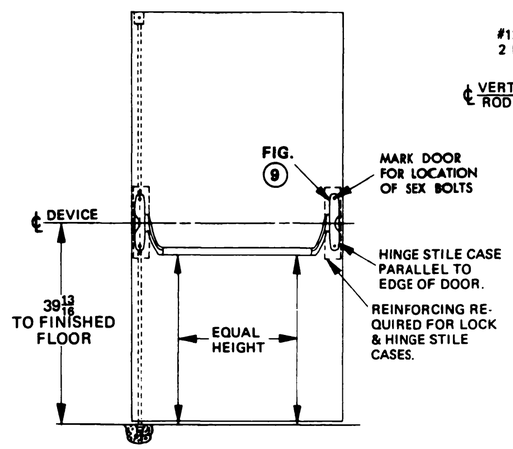

FIG. 5

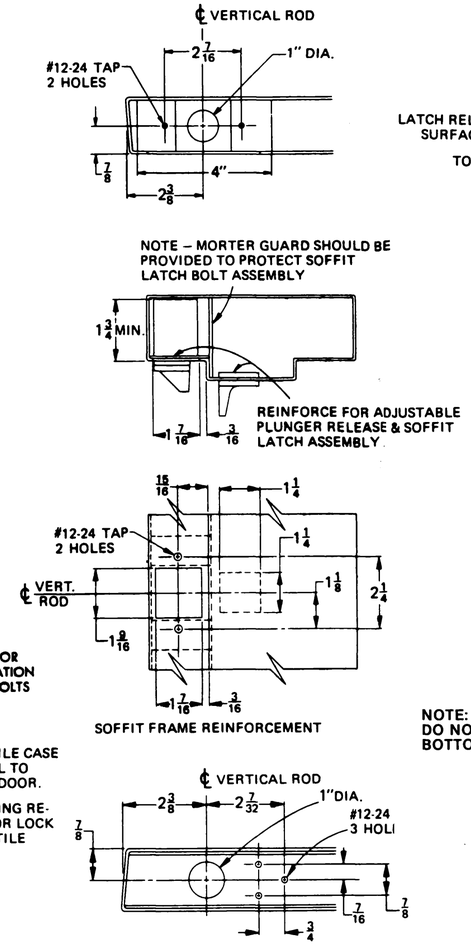

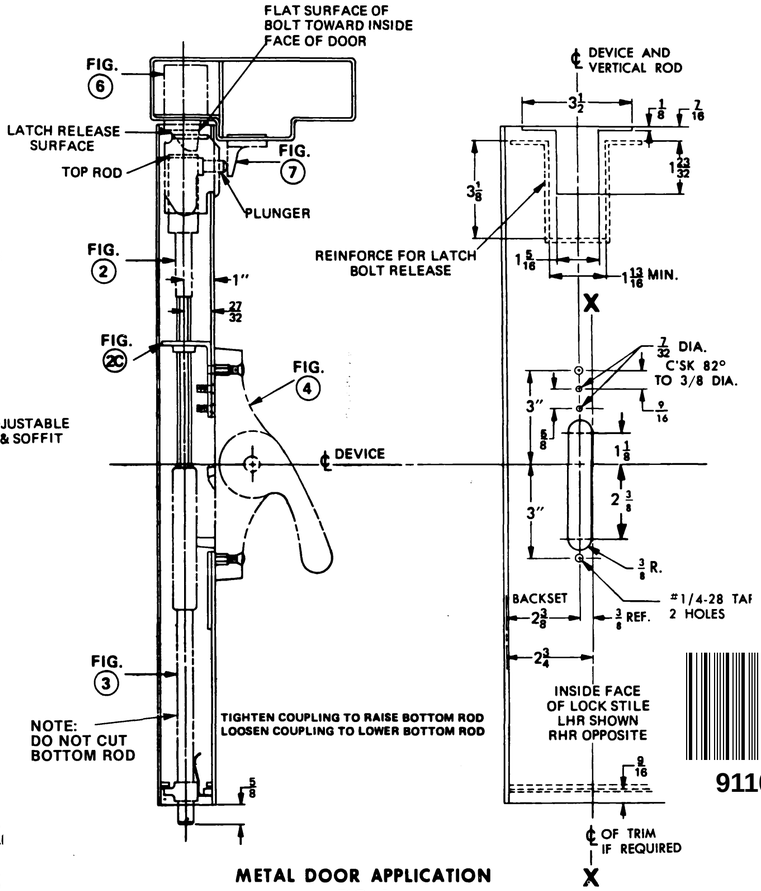

METAL DOOR APPLICATION
FIG. 1

911065-00

FOR TRIM APPLICATION SEE DIRECTIONS IN TRIM CARTON IF REQUIRED

UL LISTED FIRE EXIT HARDWARE

DESCRIPTION		
5547-F CONCEALED VERTICAL ROD DEVICE	VON DUPRIN DIRECTION NUMBER 911065-00(9)	DATE 1/01/03

CUT HERE

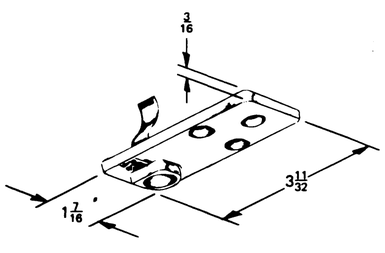

BOTTOM ROD GUIDE

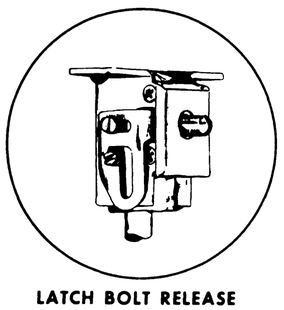

LATCH BOLT RELEASE

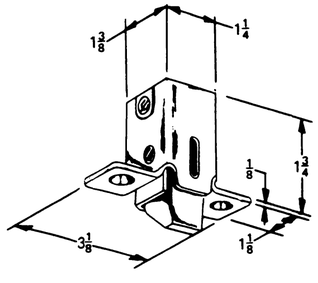

SOFFIT LATCH BOLT ASSEMBLY

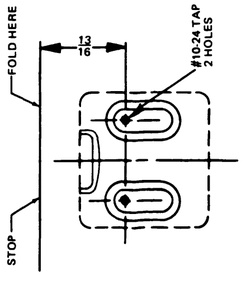

TEMPLATE NO. 3

PLUNGER RELEASE BRACKET

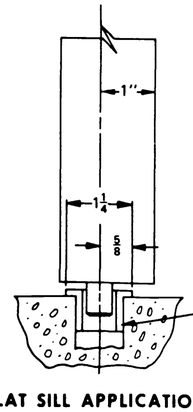

FLAT SILL APPLICATION

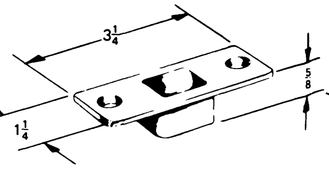

301L STRIKE

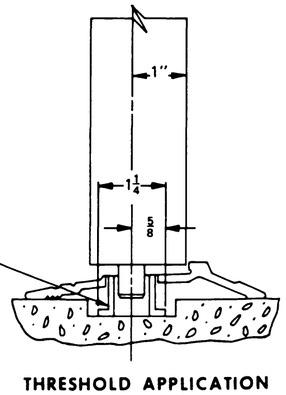

THRESHOLD APPLICATION

CUT HERE

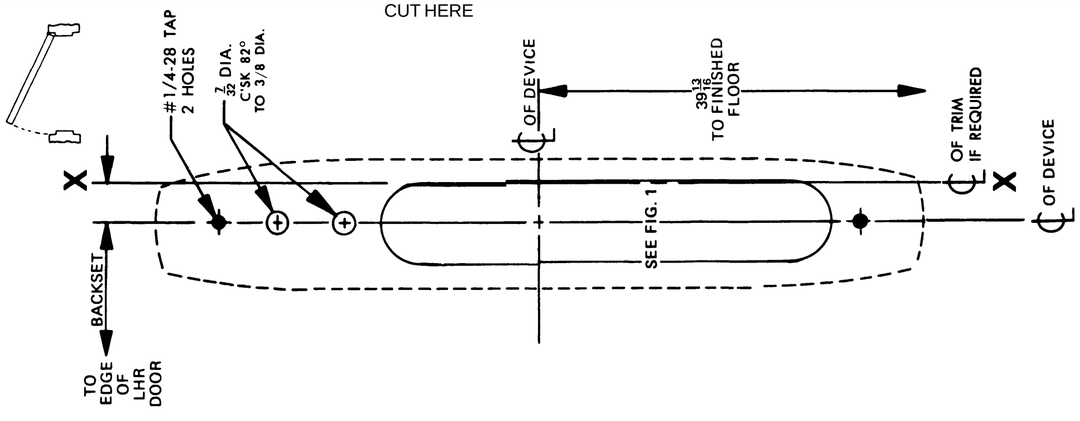

TEMPLATE NO. 1

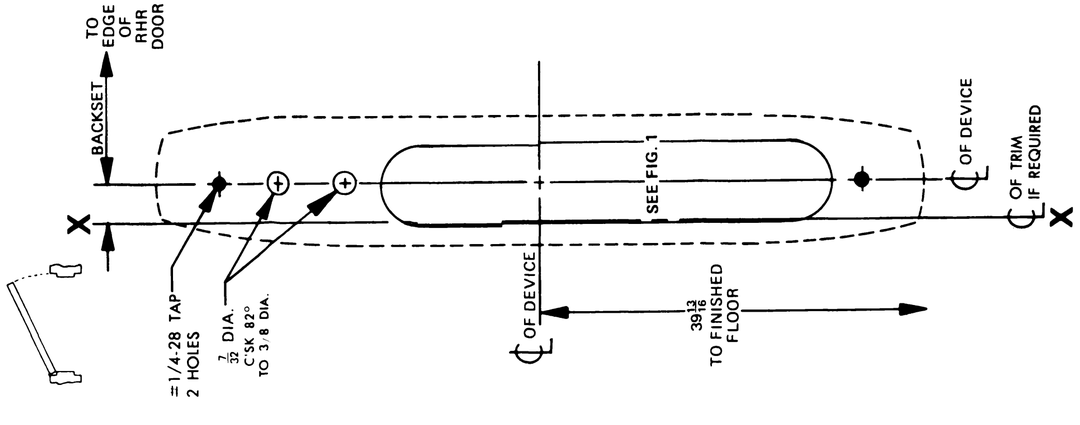

TEMPLATE NO. 2